KAESER COMPRESSORS

www.kaeser.com

Portable Compressors MOBILAIR M13-M270

With the world-renowned SIGMA PROFILE

Free air delivery: 1.2 to 26.9 m³/min

KAESER COMPRESSORS

Made in Germany

KAESER's renowned MOBILAIR range of portable compressors is manufactured in a state-of-the-art production facility located directly next to the KAESER main plant in Coburg, Northern Bavaria. Equipped with the very latest technology, the recently modernised portable compressor plant boasts TÜV (German Technical Inspection Agency) certified sound testing facilities for free-field sound level measurement, an advanced powder coating installation and highly efficient production logistics. With minimal turn-around time, KAESER's highly qualified personnel are able to assemble portable compressors of all sizes and equipment levels to suit our customers' specific needs.

Compressed air as a versatile energy source

With 90 years experience in machine construction and engineering, KAESER KOMPRESSOREN is one of the world's leading compressor manufacturers and compressed air system providers. KAESER's comprehensive range of products and services ensures that every compressed air systems user will find a solution that meets his or her exact needs.

Save energy with the KAESER SIGMA PROFILE

MOBILAIR 43 model shown

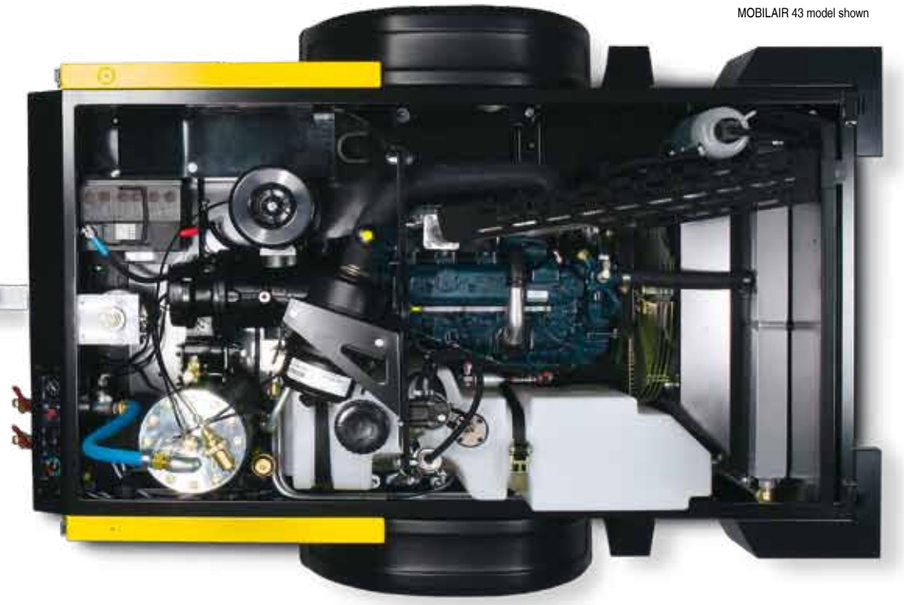

SIGMA PROFILE

Every KAESER rotary screw airend is equipped with energy-saving SIGMA PROFILE rotors. Components manufactured to the highest standards and precision aligned roller-bearings ensure long service life with maximum reliability.

User-friendly design

MOBILAIR portable compressors are simple to operate, provide excellent component accessibility and are easy to maintain. Features also include automatic monitoring and shutdown.

Patented Anti-Frost Control

Specially developed by KAESER for portable compressors, the patented Anti-Frost Control automatically regulates operating temperature in relation to ambient. This innovative system therefore prevents breakers from freezing up and significantly extends air-tool service life.

Fluid circulation and compressed air production

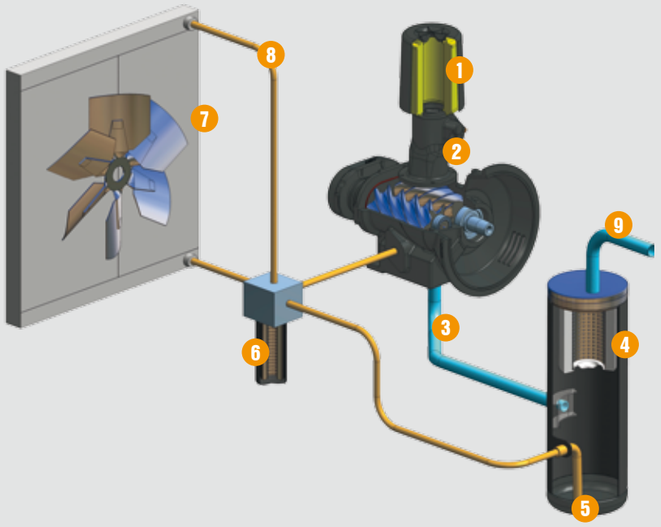

1. Intake air
2. Rotary screw airend
3. Fluid/air mixture
4. Fluid separator
5. Fluid with compression heat
6. Thermostatic valve, or Anti-Frost Control with micro-fluid filter
7. Fluid cooler
8. Cool oil
9. Compressed air

KAESER's comprehensive range of products and services

Compressed air system solutions for every application

Compact powerhouses

With petrol engines up to 15 bar

The smallest MOBILAIR compressors are more than capable of powering breakers, drills, saws, grinders, impact wrenches and even impact borers. The 15-bar version is the ideal choice for trenchless laying of glass fibre cables or for leakage tests. In addition, the compressor can be equipped with an external compressed air aftercooler for certain applications that may require cool and condensate-free compressed air.

MOBILAIR M 13

Technical Specifications

Model	FAD m³/min	Working pressure bar	Engine	Rated engine power kW	Operational weight kg	Fuel tank capacity l	Air connection	Compressed air aftercooler
M 13	1.2 / 1.0 / 0.9 / 0.85	7 / 10 / 12 / 13	Honda GX 630	15.5	202	20	1 x G½	Option
M 15	1.4*	7*	Honda GX 630	15.5	202	20	1 x G½	Option
M 17	1.6* / 1.0	7* / 15	Honda GX 630	15.5	204	20	1 x G½	Option

*Only for export outside of the EU

KAESER COMPRESSORS

Portable compressors

With the patented Anti-Frost Control

MOBILAIR portable compressor models with free air deliveries ranging from 2 to 5.6 m³/min ensure dependable performance even in cold conditions: KAESER's patented Anti-Frost Control automatically adjusts operating temperature according to ambient temperature. This system is therefore particularly useful at times of the year when ambient temperatures are lower, as it protects air tools against freezing and significantly enhances both system availability and service life.

MOBILAIR M20 PE

Technical Specifications

Model	FAD m³/min	Working pressure bar	Engine	Rated engine power kW	Operational weight kg	Fuel tank capacity l	Air connection	Compressed air aftercooler
M20	2.0	7	Kubota D 722	14.0	457	30	2 x G¾	–
M26	2.6	7	Kubota D 1105	17.9	498	30	2 x G¾	–
M30	3.0	7	Kubota D 1105-T	24.1	505	30	2 x G¾	–
M43	4.2	7	Kubota V 1505-T	30.1	730	80	2 x G¾	–
M50	5.0	7	Kubota V 1505-T	32.5	735	80	2 x G¾, 1 x G1	–
M57 Utility	5.1 / 5.4*	7	Kubota V 2403	36.0	960	105	2 x G¾, 1 x G1	Option
M57	5.6	7	Kubota V 2403	36.0	1225	105	2 x G¾, 1 x G1	–

*Only for export outside of the EU

Exceptional power and versatility

Compressed air and more...

The MOBILAIR portable compressors in this product group provide exceptional versatility. Optionally available with synchronous generators and / or compressed air treatment components, these compressors are also offered in various maximum pressure versions. This large selection of possible configurations therefore ensures that an appropriate model is available to meet the needs of virtually any application.

MOBILAIR M 64 G

Technical Specifications

Model	FAD m³/min	Working pressure bar	Engine	Rated engine power kW	Operational weight kg	Fuel tank capacity l	Air connection	Compressed air treatment	Generator option kVA
M 36	3.9	7	Kubota V 2403	36.0	1145	80	2 x G¾, 1 x G1	Option	13 (Standard)
M 45	4.2 / 4.15	7 / 10	Kubota V 2203	35.4	995	80	2 x G¾, 1 x G1	Option	8.5
M 52	5.2	7	Kubota V 2203	35.4	1225	105	2 x G¾, 1 x G1	Option	8.5
M 64	6.4 / 5.0	7 / 10	Kubota V 2403T	43.3	1230	105	2 x G¾, 1 x G1	Option	8.5 / 13
M 70	7.0* / 5.4*	7* / 10*	Kubota V 2003-T	43.3	1230	105	2 x G¾, 1 x G1	Option	–
M 80	8.1 / 6.8 / 6.1 / 5.5	7 / 10 / 12 / 14	Kubota V 3307 DI-T	54.6	1480	150	3 x G ¾, 1 x G 1½	Option	8.5 / 13
M 100	10.2 / 8.5 / 7.2 / 6.4	7 / 10 / 12 / 14	Kubota V 3800 DI-T	71.7	1495	150	3 x G ¾, 1 x G 1½	Option	8.5 / 13
M 122	11.1 / 10.1 / 9.5 / 8.2 / 7.3	7 / 8.6 / 10 / 12 / 14	Deutz TCD 2012 L04	83.0	1865	170	3 x G ¾, 1 x G 1½	Option	–

*Only for export outside of the EU

KAESER COMPRESSORS

Efficiency and performance
With SIGMA CONTROL MOBILE

Available for MOBILAIR compressors with free air deliveries up to 26.9 m³/min, the innovative 'SIGMA CONTROL mobile' compressor control system is simple to use and precisely matches motor power to actual compressed air demand. This significantly enhances both compressed air availability and fuel efficiency.

MOBILAIR M 200

Technical Specifications

Model	FAD m³/min	Working pressure bar	Engine	Rated engine power kW	Operational weight kg	Fuel tank capacity l	Air connection	Compressed air treatment	Generator option kVA
M 123	11.4 / 10.8 / 9.7 / 8.1	8.6 / 10 / 12 / 14	Deutz TCD 2012 L04	88	1945	170	3 x G¾, 1 x G½	Option	–
M 135	13 / 12 / 10.5	10 / 12 / 14	Deutz TCD 2013 L04	122	2500	200	3 x G¾, 1 x G 2	Option	15/23
M 170	17 / 15.5 / 13.5 / 11.5	8.6 / 10 / 12 / 14	Deutz TCD 2012 L06	128	2600	200	3 x G¾, 1 x G 2	Option	–
M 200	21.2* / 19.7 / 18 / 16 / 14.5	7* / 8.6 / 10 / 12 / 14	Caterpillar C 6.6 ACERT	146	3235	270	3 x G¾, 1 x G 2	Option	–
M 270	26.9 / 25.8 / 22.8 / 20	8.6 / 10 / 12 / 14	Mercedes Benz OM 501 LA	260	5025	560	1 x G 2½ 2 x G1	Option	–

* Only for export outside of the EU

The environmentally-friendly alternative
with electric drive

MOBILAIR electric portable compressors truly come into their own in work environments where quiet and exhaust-free conditions are required. These environmentally-friendly compressors therefore elegantly avoid the restrictions that apply to the use of combustion engines.

MOBILAIR M 13 E

MOBILAIR M 34 E

Technical Specifications

Model	FAD m³/min	Working pressure bar	Motor	Rated motor power kW	Operational weight kg	Fuse protection A	Air connections	Compressed air aftercooler
M 13 E	1.2 / 1 / 0.9 / 0.85 / 0.75	7 / 10 / 12 / 13 / 15	ABM 4D112M-2	7,5	187	25	1 x G½	Option
M 34 E	3.4	7	ATB A160L/-21	22	650	50	2 x G¾	Option
M 46 E	4.6 / 3.35	7 / 10	Siemens 1LA9 183-2	30	720	63	2 x G¾, 1 x G1	Option

KAESER COMPRESSORS

MOBILAIR Options

● Standard
○ Option

Chassis

	M13 / M15 / M17	M20	M26 / M30	M43 / M50	M57	M57Utility	M36	M45	M52	M64	M70	M80 / M100	M122	M123	M135	M170	M200	M270	M13E	M34E / M46E
Can be pulled manually	●	-	-	-	-	-	-	-	-	-	-	-	-	-	-	-	-	-	●	-
Unbraked	-	●	●	●	-	-	-	-	-	-	-	-	-	-	-	-	-	-	-	●
Braked	-	○	○	○	●	-	●	●	●	●	●	●	●	●	●	●	●	●	-	○
Height-adjustable tow bar	-	●	●	●	●	-	●	●	●	●	●	●	●	●	●	●	●	●	-	●
Fixed tow bar	-	○	○	○	○	-	○	○	○	○	○	○	○	○	○	○	○	-	-	-
Stationary version	○	○	-	○	○	-	○	○	○	○	○	○	○	○	○	○	○	○	○	○
Skids	-	○	○	○	○	●	○	○	○	○	○	○	○	○	○	○	○	○	-	○

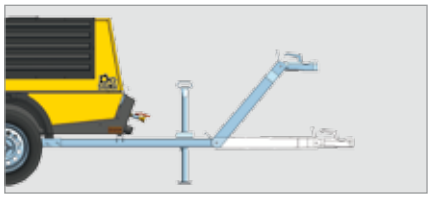

Height-adjustable towing hitch without overrun brake and parking brake

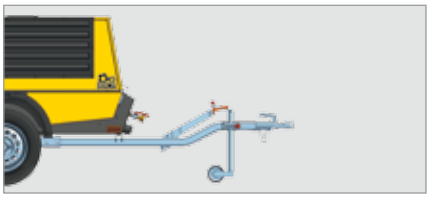

Fixed towing hitch without overrun brake, with parking brake

Stationary version

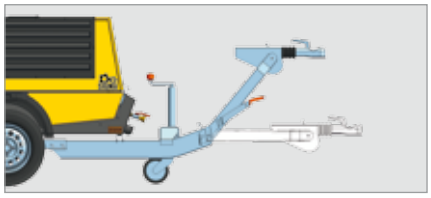

Height-adjustable towing hitch with overrun brake and parking brake

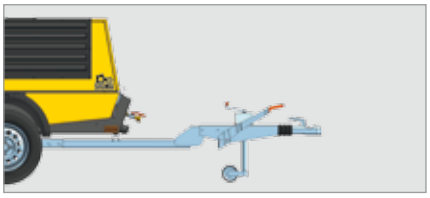

Fixed towing hitch with overrun brake and parking brake

Skids

Compressed air treatment

	M13 / M15 / M17	M20	M26 / M30	M43 / M50	M57	M57Utility	M36	M45	M52	M64	M70	M80 / M100	M122	M123	M135	M170	M200	M270	M13E	M34E / M46E
Anti-Frost Control	-	●	●	●	●	●	●	●	●	●	●	●	-	-	-	-	-	-	-	-
Compressed air after-cooler	○	-	-	-	-	○	○	○	○	○	○	○	○	○	○	○	○	○	○	○
Microfilter combination	-	-	-	-	-	-	○	○	○	○	○	○	○	○	○	○	○	○	-	-
Heat feedback	-	-	-	-	-	-	○	○	○	○	○	○	○	○	○	○	○	-	-	-

System A
- Cool
- Condensate-free

Cool, condensate-free compressed air (100 % saturated), **for driving air tools and temporarily replacing stationary compressors**

System F
- Cool
- Condensate-free
- Filtered

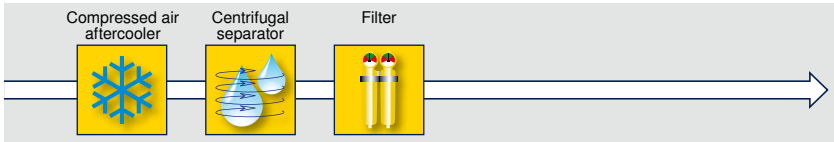

Cool, condensate-free compressed air (100 % saturated), **free from dirt particles and oil in accordance with applicable regulations**

System B
- Warmed
- Dried

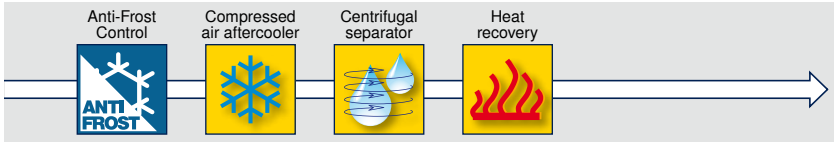

Dried compressed air, warmed to at least 20 °C, **for working at sub-zero temperatures and with long air lines**

System G
- Warmed
- Dried
- Filtered

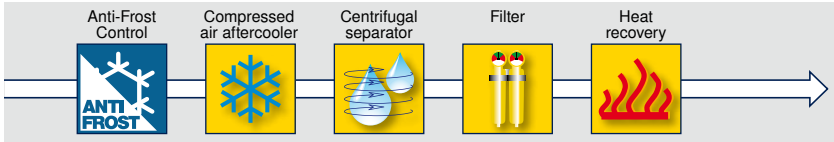

Dried compressed air, warmed to at least 20 °C, **free from dirt particles and oil in accordance with applicable regulations**

Additional compressed air treatment systems are available upon request. Please contact Kaeser for further details.

MOBILAIR Options

● Standard
○ Option

Generator

	M13 / M15 / M17	M20	M26 / M30	M43 / M50	M57	M57Utility	M36	M45	M52	M64	M70	M80 / M100	M122	M123	M135	M170	M200	M270	M13E	M34E / M46E
8.5 kVA	-	-	-	-	-	-	-	○	○	○	-	○	-	-	-	-	-	-	-	-
13 kVA	-	-	-	-	-	-	●	-	-	○	-	○	-	-	-	-	-	-	-	-
15 kVA	-	-	-	-	-	-	-	-	-	-	-	-	-	-	○	-	-	-	-	-
23 kVA	-	-	-	-	-	-	-	-	-	-	-	-	-	-	○	-	-	-	-	-
Generator panel cover	-	-	-	-	-	-	○	○	○	○	-	○	-	-	○	-	-	-	-	-

Equipment

Special colour	○	○	○	○	○	○	○	○	○	○	○	○	○	○	○	○	○	○	○	○
PE enclosure	●	○	●	○	-	-	-	-	-	-	-	-	-	-	-	-	-	-	-	-
Sigma Control mobile	-	-	-	-	-	-	-	-	-	-	-	-	-	●	●	●	●	●	-	-
Instrument panel cover	-	-	-	-	○	●	-	-	○	○	○	○	○	●	●	●	●	●	-	-
Battery isolating switch	-	○	○	○	○	○	○	○	○	○	○	○	○	●	●	●	●	●	-	-
Tool lubricator	-	○	○	○	○	○	○	○	○	○	○	○	○	○	-	-	-	-	-	○
Check valve (Standard from 10 bar)	○	-	○	○	●	●	●	○	●	●	●	●	●	●	●	●	●	●	●	●
Tool chest	-	-	○	●	●	-	●	●	●	●	●	●	●	●	-	-	-	-	-	●
Hose reel	-	○	○	○	○	-	○	○	○	○	○	-	-	-	-	-	-	-	-	○
Security chain	-	○	○	○	○	-	○	○	○	○	○	○	○	○	○	○	-	-	-	○
Document bag	-	○	○	○	○	○	○	○	○	○	○	○	○	○	●	●	●	○	-	○
Water separator for fuel	-	○	○	○	○	●	●	●	●	●	●	●	●	●	●	●	●	●	-	-
Spark arrestor	-	-	○	○	○	○	○	○	-	○	○	○	○	○	○	○	○	○	-	-
Engine shut-off valve	-	-	-	○	○	○	○	○	-	○	○	○	○	○	○	○	○	○	-	-
Closed floor pan	-	●	○	○	○	●	○	○	○	○	○	○	○	○	○	○	○	○	-	-
Low temperature version to -25 °C	-	○	○	○	○	○	○	○	○	○	○	○	○	○	○	○	○	○	-	○

MOBILAIR Accessories

- Electrical connection cable to towing vehicle and adapter (7 and 13 pole, 12 and 24 V)
- 50 mm ball couplings and towing eyes available with diameters of 45, 68 and 76 mm
- Various hose lines (separate or integrated with claw couplings)
- Hose lubricator with 1 l capacity
- Centrifugal separator on support stand, optionally available with 4 l tool lubricator
- Fluids, lubricants and filter sets

Genuine KAESER parts

As with all KAESER products, consumable and spare parts are quality tested to ensure best possible performance. Be safe in the knowledge that all components are guaranteed and designed to meet the demands of the applicable operating conditions.

ORIGINAL

KAESER COMPRESSORS

Compressed air tools

Model	Blow frequency per min	Air demand *) m³/min	Chuck Shank		Weight kg	Impact force Nm	Weighted sum acceleration value **) m/s²
Breakers							
With hand grip							
H 63	2630	1.1	S19x50	a)	5.8	13.5	7.5
H 93	1690	1.2	R25x75	b)	9.3	34	6.2
H 93	1690	1.2	S22x82.5	c)	9.4	34	6.2
H 93	1690	1.2	S22x82.5	d)	9.8	34	6.2
H 112	1760	1.7	R25x75	b)	12.0	40	7.7
H 112	1660	1.6	S22x82.5	c)	12.5	40	7.7
H 132	1560	1.4	S22x82.5	d)	14.3	40	7.7
With hand grip (vibration damped)							
H 93 V	1760	1.3	S22x82.5	c)	10.6	30	1.8
H 111 V	1625	1.5	S22x82.5	c)	12.8	42.5	5.1
H 131 V	1135	1.6	S22x82.5	c)	13.9	52.5	5.0
T-grip (vibration damped)							
AH 140 V	1680	1.4	S22x82.5	c)	14.8	40	4.7
AH 160 V	1240	1.3	S25x108	e)	18.8	54	4.3
AH 182 V	1310	1.6	S25x108	e)	20.5	49	5.6
AH 211 V	1180	1.7	S25x108	e)	21.1	58	5.2
AH 251 V	1065	1.7	S28x152	e)	24.4	64	6.7
AH 251 V	1065	1.7	S32x152	e)	24.6	64	6.7
AH 301 V	1065	1.9	S32x152	e)	27.5	74	10.0

*) at 6 bar, **) as per ISO8662, a) Retaining spring, b) Retaining cap, c) Cross cap, d) Retaining catch, e) Locking retaining cap

Economy breakers							
With hand grip							
CH 0	3600	0.4	15x12.8x51.5	a)	2.6	7	12.0
H 31	2800	0.5	17.5x14.8x60	a)	4.5	12	10.0
CH 3	2400	0.7	17.5x14.8x60	a)	5.8	12	10.6
CHH 4	1800	1.0	17.5x14.8x60	b)	8.1	29	11.6
H 10	1300	0.9	S22x82.5	c)	9.5	7	7.9
With T-grip							
AH 152	1600	1.1	S25x108	c)	18.0	11	17.0
AH 201	1030	1.3	S25x108	c)	20.0	13	13.9
AH 28	1100	1.7	S32x152	c)	28.0	17	13.6

*) at 6 bar, **) as per ISO8662, a) Retaining spring, b) Retaining cap, c) Retaining catch

Hammer drills							
With hand grip							
BH 8	3660	0.6	S19x82.5	a)	10.0	10	13.1
BH 8	3660	0.6	S22x82.5	a)	8.6	10	13.1
BH 11	2910	1.4	S22x108	b)	15.5	24	20.0
With T-grip							
BH 16	2440	1.9	S22x108	b)	18.9	31	20.3
BH 21	2740	2.1	S22x108	b)	23.9	50	23.1
With T-grip (vibration damped)							
BH 16 V	2440	1.9	S22x108	b)	22.9	31	4.8

*) at 5 bar, **) as per ISO8662, a) Retaining cap, b) Retaining bracket

KAESER – The world is our home

As one of the world's largest compressor manufacturers, KAESER KOMPRESSOREN is represented throughout the world by a comprehensive network of branches, subsidiary companies and authorised partners in over 60 countries.

With innovative products and services, Kaeser Kompressoren's experienced consultants and engineers help customers to enhance their competitive edge by working in close partnership to develop progressive system concepts that continuously push the boundaries of performance and compressed air efficiency. Moreover, the decades of knowledge and expertise from this industry-leading system provider are made available to each and every customer via the Kaeser group's global computer network.

These advantages, coupled with KAESER's worldwide service organisation, ensure that all products operate at the peak of their performance at all times and provide maximum availability.

LGA InterCert
Certified QM/EM System
ISO 9001:2008 / ISO 14001:2004

KAESER COMPRESSORS
Built for a Lifetime!

KAESER COMPRESSORS Australia Pty. Ltd.
Locked Bag 1406 – Dandenong South – Vic. 3164
45 Zenith Road – Dandenong – Vic. 3175
Phone: +61 3 9791 5999 – Fax: +61 3 9791 5733
www.kaeser.com – E-mail: air@kaeser.com.au

P-500AUS/11 Specifications are subject to change without notice